Work Order ID 73579

Tuesday, September 06, 2011 8:44:34 AM

Item ID: D350-748-141TRN
Revision ID: ~~U/R~~
Item Name: Crosstube Turning Detail

Accept

Setup Start
Stop

Start Date: 9/6/2011 **Start Qty:** 1.00
Required Date: 9/16/2011 **Req'd Qty:** 1.00
Reference:

Cust Item ID:
Customer:

Run Start
Stop

Approvals: **Process Plan:** CL **Date:** 11/09/06 **Tooling:** _____ **Date:** _____
QC: _____ **Date:** _____ **SPC (Y/N):** _____ **Date:** _____

Sequence ID/ Work Center ID	Operation Description	Set Up/ Run Hours	Tool ID	Tool #	Plan Code	Accept Qty	Reject Qty	Reject Number	Insp. Stamp
Draw Nbr / **Revision Nbr**									
D350-748-141 / F ~~U/R~~ OK CP 11.09.06									
100	MORI SEIKI CNC LATHE LARGE	0.00				1	Ø		
Mori Seiki	**Memo**	0.00							
Mori Seiki CNC Lathe Large	1-Fill tube with sand & install plugs on both ends as per Folio FA648 2-Turn first side as per Folio FA648 3- File transition lines smooth.					MMC 11/09/08			
110	QC1- Inspect dimensions to dimension sheet	0.00				1	Ø		
QC	**Memo**	0.00							
Quality Control						MMC 11/09/08			
120	MORI SEIKI CNC LATHE LARGE	0.00				1	Ø		
Mori Seiki	**Memo**	0.00							
Mori Seiki CNC Lathe Large	1-Turn second side as per Folio FA648 2- File transition lines smooth. 3-Scribe Part & Batch as per Dwg D350-748-141					MMC 11/09/08			

Dart Aerospace Ltd

W/O:		WORK ORDER CHANGES					
DATE	STEP	PROCEDURE CHANGE	By	Date	Qty	Approval Chief Eng / Prod Mgr	Approval QC Inspector

Part No: _____ **PAR #:** _____ **Fault Category:** _____ **NCR:** Yes No **DQA:** _____ **Date:** _____

Resolution: _____ **Disposition:** _____ **QA: N/C Closed:** _____ **Date:** _____

NCR:		WORK ORDER NON-CONFORMANCE (NCR)						
DATE	STEP	Description of NC Section A	Corrective Action Section B			Verification Section C	Approval Chief Eng	Approval QC Inspector
			Initial Chief Eng	Action Description Chief Eng	Sign & Date			

NOTE: Date & initial all entries

H:\fFORMS\Quality Assurance\approved QA\NCRWO RevE

Work Order ID 73579

Tuesday, September 06, 2011 8:44:35 AM

Item ID: D350-748-141TRN
Revision ID: U/R
Item Name: Crosstube Turning Detail

Accept

Setup Start
Stop

Start Date: 9/6/2011 **Start Qty:** 1.00
Required Date: 9/16/2011 **Req'd Qty:** 1.00
Reference:

Cust Item ID:
Customer:

Run Start
Stop

Approvals: **Process Plan:** _____ **Date:** _____ **Tooling:** _____ **Date:** _____
QC: _____ **Date:** _____ **SPC (Y/N):** _____ **Date:** _____

Sequence ID/ Work Center ID	Operation Description	Set Up/ Run Hours	Tool ID	Tool #	Plan Code	Accept Qty	Reject Qty	Reject Number	Insp. Stamp
130	QC1- Inspect dimensions to dimension sheet	0.00				1	Ø		
QC	Memo	0.00							
Quality Control									
140	QC8- Inspect parts - second check	0.00							
QC	Memo	0.00							
Quality Control									
150		0.00							
Crosstubes	Large Fab								
Crosstubes	Memo Grind machining marks	0.00							

11/09/08

11-9-12

DC/ 11-9-12

Dart Aerospace Ltd

W/O:		WORK ORDER CHANGES					
DATE	STEP	PROCEDURE CHANGE	By	Date	Qty	Approval Chief Eng / Prod Mgr	Approval QC Inspector

Part No: _____ **PAR #:** _____ **Fault Category:** _____ **NCR:** Yes No **DQA:** _____ **Date:** _____

Resolution: _____ **Disposition:** _____ **QA: N/C Closed:** _____ **Date:** _____

NCR:		WORK ORDER NON-CONFORMANCE (NCR)						
DATE	STEP	Description of NC Section A	Corrective Action Section B			Verification Section C	Approval Chief Eng	Approval QC Inspector
			Initial Chief Eng	Action Description Chief Eng	Sign & Date			

NOTE: Date & initial all entries

H:\fFORMS\Quality Assurance\approved QA\NCRWO RevE

Work Order ID 73579

Tuesday, September 06, 2011 8:44:35 AM

Item ID: D350-748-141TRN
Revision ID: U/R
Item Name: Crosstube Turning Detail

Accept

Setup Start
Stop

Start Date: 9/6/2011 **Start Qty:** 1.00
Required Date: 9/16/2011 **Req'd Qty:** 1.00
Reference:

Cust Item ID:
Customer:

Run Start
Stop

Approvals: **Process Plan:** _____ **Date:** _____ **Tooling:** _____ **Date:** _____
QC: _____ **Date:** _____ **SPC (Y/N):** _____ **Date:** _____

Sequence ID/ Work Center ID	Operation Description	Set Up/ Run Hours	Tool ID	Tool #	Plan Code	Accept Qty	Reject Qty	Reject Number	Insp. Stamp
160	Outsource process - Heat Treat	0.00							
Outsource1							11-09-27		
Outsource process - Heat Treat	**Memo**	0.00							
	Issue P/O: 15028 Heat Treat to min 180 KSI As per Dwg D350-748-141 (MIL-T-6736 OR AMS 2759-1C) Sand Blast tube after Heat Treat Possibe Supplier: Vac Aero Ensure Certificate of Conformity is attached								
170	Receive & Inspect for Damage & Mat'l Certs	0.00							
Packaging							11/10/02		
Packaging	**Memo**	0.00							
	Ensure certificate of conformaty is attached								
180	QC6- Inspect dimensions to drawing	0.00							
QC							11-11-03		
Quality Control	**Memo**	0.00							

Dart Aerospace Ltd

W/O:		WORK ORDER CHANGES					
DATE	STEP	PROCEDURE CHANGE	By	Date	Qty	Approval Chief Eng / Prod Mgr	Approval QC Inspector

Part No: _____ **PAR #:** _____ **Fault Category:** _____ **NCR:** Yes No **DQA:** _____ **Date:** _____

Resolution: _____ **Disposition:** _____ **QA: N/C Closed:** _____ **Date:** _____

NCR:		WORK ORDER NON-CONFORMANCE (NCR)						
DATE	STEP	Description of NC Section A	Corrective Action Section B			Verification Section C	Approval Chief Eng	Approval QC Inspector
			Initial Chief Eng	Action Description Chief Eng	Sign & Date			

NOTE: Date & initial all entries

Work Order ID 73579

Tuesday, September 06, 2011 8:44:35 AM

Item ID: D350-748-141TRN
Revision ID: U/R
Item Name: Crosstube Turning Detail

Accept

Setup Start
Stop

Start Date: 9/6/2011 **Start Qty:** 1.00
Required Date: 9/16/2011 **Req'd Qty:** 1.00
Reference:

Cust Item ID:
Customer:

Run Start
Stop

Approvals: **Process Plan:** _____ **Date:** _____ **Tooling:** _____ **Date:** _____
QC: _____ **Date:** _____ **SPC (Y/N):** _____ **Date:** _____

Sequence ID/ Work Center ID	Operation Description	Set Up/ Run Hours	Tool ID	Tool #	Plan Code	Accept Qty	Reject Qty	Reject Number	Insp. Stamp
190	Packaging	0.00							
Packaging									
Packaging	**Memo**	0.00	mo	11/11/7					
Packaging	Identify and stock in kanban rack Location: LG								
200	QC21- Final Inspection - Work Order Release	0.00							
QC	**Memo**	0.00					11/11/7		
Quality Control									

11-11-07
1

Dart Aerospace Ltd

W/O:		WORK ORDER CHANGES					
DATE	STEP	PROCEDURE CHANGE	By	Date	Qty	Approval Chief Eng / Prod Mgr	Approval QC Inspector

Part No: _____ **PAR #:** _____ **Fault Category:** _____ **NCR:** Yes No **DQA:** _____ **Date:** _____

Resolution: _____ **Disposition:** _____ **QA: N/C Closed:** _____ **Date:** _____

NCR:		WORK ORDER NON-CONFORMANCE (NCR)						
DATE	STEP	Description of NC Section A	Corrective Action Section B			Verification Section C	Approval Chief Eng	Approval QC Inspector
			Initial Chief Eng	Action Description Chief Eng	Sign & Date			

NOTE: Date & initial all entries

H:\fFORMS\Quality Assurance\approved QA\NCRWO RevE

Picklist Print

Tuesday, September 06, 2011 8:44:32 AM

Work Order ID: 73579

Parent Item: D350-748-141TRN

Parent Item Name: Crosstube Turning Detail

Start Date: 9/6/2011 **Required Date:** 9/16/2011

Start Qty: 1.00 **Required Qty:** 1.00

Comments:
IPP Rev:A New Issue 08-03-06 DD verified by:ec
IPP Rev B Removed polish 08.04.02 EC verified by : DD
IPP Rev C Remove LPS-3 08.06.23 EC verified by DD IPP Rev C
11.02.24 as per dwg rev.F DD verf: JLM

Component Item ID/ Item Name	Replacement Item ID	Mfg/ Purch	Bin Item	Primary Location	Last Location	Route Seq ID	Unit of Measure	Qty on Hand	Qty per Kit	Total Qty	Qty Issued	Date Issued	Status
D6017-115 Crosstube Material		Manufactured	No				Each	10.0000		1			

Location	Loc Qty	Loc Code
LG	10	
32912	10	

1 mam.l 11/09/08

Dart Aerospace Ltd

W/O:		WORK ORDER CHANGES					
DATE	STEP	PROCEDURE CHANGE	By	Date	Qty	Approval Chief Eng / Prod Mgr	Approval QC Inspector

Part No: _____ **PAR #:** _____ **Fault Category:** _____ **NCR:** Yes No **DQA:** _____ **Date:** _____

Resolution: _____ **Disposition:** _____ **QA: N/C Closed:** _____ **Date:** _____

NCR:		WORK ORDER NON-CONFORMANCE (NCR)						
DATE	STEP	Description of NC Section A	Corrective Action Section B			Verification Section C	Approval Chief Eng	Approval QC Inspector
			Initial Chief Eng	Action Description Chief Eng	Sign & Date			

NOTE: Date & initial all entries

H:\fFORMS\Quality Assurance\approved QA\NCRWO RevE

DART AEROSPACE LTD	Work Order:	73579
Description: Crosstube Assembly (AS350/355 High Fwd)	Part Number:	D350-748-141
Inspection Dwg: D350-748-141 Rev: F		Page 1 of 1

FIRST ARTICLE INSPECTION CHECKLIST

	Inspection Sheet Drawing Dimension	Tolerance	Actual Dimension	Accept	Reject	Method of Inspection	Comments
SIDE A	2.240	+0.005/-0.000	2.244	✓		vern	CWC-08
	2.180	+0.005/-0.000	2.184	✓		"	
	2.180	+0.005/-0.000	2.184	✓		"	
	2.237	+0.005/-0.000	2.241	✓		"	
	2.272	+0.005/-0.000	2.276	✓		"	
	2.306	+0.005/-0.000	2.310	✓		"	
	2.339	+0.007/-0.000	2.342	✓		"	
	2.339	+0.007/-0.000	2.342	✓		"	
	0.062	+/-0.010	.062	✓		vern	CWC-08
	4.26	+/-0.030	4.26			"	
	R0.063	+/-0.010	.062	✓		RG	
	R0.50	+/-0.030	.500			"	
SIDE B	2.240	+0.005/-0.000	2.242	✓		vern	CWC-08
	2.180	+0.005/-0.000	2.184	✓		"	
	2.180	+0.005/-0.000	2.184	✓		"	
	2.237	+0.005/-0.000	2.242	✓		"	
	2.272	+0.005/-0.000	2.277	✓		"	
	2.306	+0.005/-0.000	2.311	✓		"	
	2.339	+0.007/-0.000	2.343	✓		"	
	2.339	+0.007/-0.000	2.343	✓		"	
	0.062	+/-0.010	.062	✓		vern	CWC-08
	4.26	+/-0.030	4.26	✓		"	
	R0.063	+/-0.010	.063	✓		RG	
	R0.50	+/-0.030	.500	✓		"	
	110.27	+/-0.060	110.26	✓		tape	mmL-02

Measured by:	mmL	Audited by:	DP	Preliminary Approval:	
Date:	11/09/06	Date:	11-9-12	Date:	

Rev	Date	Change	Revised by	Approved
A	06.11.09	New Issue (P/O D350-748-101)	KJ/JLM	
B	07.10.24	Dwg Rev updated	KJ/EC/DD	
C	11.01.20	Dwg Rev updated	KJ	
D	11.07.26	Tolerance revised for 2.339 dimensions	KJ	

Dart Aerospace Ltd

W/O:		WORK ORDER CHANGES					
DATE	STEP	PROCEDURE CHANGE	By	Date	Qty	Approval Chief Eng / Prod Mgr	Approval QC Inspector

Part No: _____ **PAR #:** _____ **Fault Category:** _____ **NCR:** Yes No **DQA:** _____ **Date:** _____

Resolution: _____ **Disposition:** _____ **QA: N/C Closed:** _____ **Date:** _____

NCR:		WORK ORDER NON-CONFORMANCE (NCR)						
DATE	STEP	Description of NC Section A	Corrective Action Section B			Verification Section C	Approval Chief Eng	Approval QC Inspector
			Initial Chief Eng	Action Description Chief Eng	Sign & Date			

NOTE: Date & initial all entries

H:\FORMS\Quality Assurance\approved QA\NCRWO RevE

DESIGN	DRAWN BY	DART AEROSPACE LTD HAWKESBURY, ONTARIO, CANADA	
CHECKED	APPROVED	DRAWING NO. D6017	REV. A SHEET 1 OF 1
DATE 06.06.30		TITLE CROSSTUBE MATERIAL	SCALE 1:1
A	06.06.30	NEW ISSUE	

SPECIFICATION CONTROL DRAWING

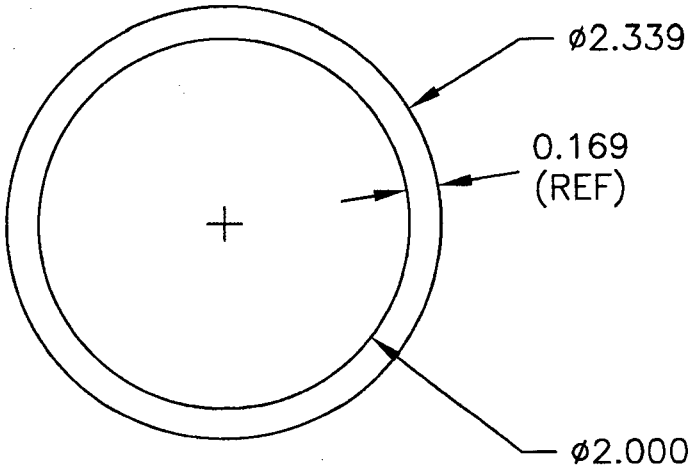

CL11109106
W10: 73579

NOTES

1) D6017–XXX CROSSTUBE
LENGTH

WHERE XXX IS LENGTH IN INCHES
EG. 115" LONG TUBE: D6017–115

RELEASED
06.08.15

2) MATERIAL: AISI 4130 (AMS 6371) SEAMLESS STEEL TUBE
2.339 OD x 2.000 ID
ANNEALED

3) TOLERANCES ARE PER ASTM A519 AS FOLLOWS:
O.D.: +0.007/–0.000
I.D.: +0.000/–0.007
LENGTH: XXX +0.188/–0.000
STRAIGHTNESS: 0.010" DEVIATION / 12" LENGTH

4) EXTREME CARE MUST BE TAKEN TO PROTECT THE OUTSIDE SURFACE OF THE TUBE. THE OUTSIDE SURFACE MUST BE SMOOTH AND FREE FROM SURFACE DEFECTS SUCH AS SCRATCHES, NICKS, OR DENTS. DEFECTS UP TO 0.005" MAY BE BLENDED OUT LONGITUDINALLY. CIRCUMFERENTIAL GRIND MARKS ARE UNACCEPTABLE.

Item	Qty -141	Part Number	Description
1	X	D350-748-141	**CROSSTUBE ASSEMBLY (AS 350/355 HI FWD)**
2	1	D6015-125	CROSSTUBE (OR D6017-115)
3	2	D3502-1	SUPPORT
4	2	D2856-400-710	ABRASION STRIP
5	1	AELS-1032-225	INSERT
6	1	NAS1149D0363J	WASHER (OR AN960JD10)
7	2	MS21920-20	CLAMP (PER DART SPEC. M-MS21920-20)
8	1	MS27039-1-10	SCREW

GENERAL NOTES:

1) MATERIAL: MANUFACTURED FROM D6015-125 OR D6017-115
   FINISHED LENGTH = 110.270±0.06
2) FINISH: MAGNETIC PARTICLE INSPECT PER DART QSI 038 4.2
   CADMIUM PLATE PER AMS-QQ-P-416B, CLASS 1, TYPE II
   PRIME INSIDE AND OUTSIDE PER DART QSI 005 4.2
   PAINT OUTSIDE PER DART QSI 005 4.2
3) TOLERANCES ARE PER DART QSI 018 UNLESS OTHERWISE NOTED.
4) UNITS: INCHES UNLESS OTHERWISE NOTED.
5) BREAK SHARP EDGES: 0.005 TO 0.010 MAX.
6) IDENTIFICATION: DART PART NUMBER "D350-748-141" AND BATCH NUMBER ON INSIDE OF CUFF PER DART QSI 044 6.4 (VIBRATING STYLUS)
7) WEIGHT: 30.45 lbs
8) PART IS SYMMETRIC ABOUT CENTERLINE, EXCEPT FOR Ø0.297 HOLE.
9) BLEND OUT ALL EDGES FROM MACHINING LONGITUDINALY, TRANSITION SHOULD BE SMOOTH. NOTE: ALL HOLES ARE DRILLED AFTER BENDING.
10) BEND PROGRESSIVELY WITH A MINIMUM OF 7 PASSES. MAXIMUM TUBE FLATTENING DUE TO BENDING IS 6% BASED ON O.D.
11) HEAT TREAT TO MIN. 180 KSI PER MIL-T-6736 OR AMS 2759-1C AFTER TURNING. ACCEPTABLE TO VERIFY TENSILE STRENGTH BY HARDNESS TEST PER ASTM E18 TO 40-45 HRC.
12) INSTALL D2856-400-710 ABRASION STRIPS WITH A GAP ON BOTTOM SIDE OF CROSSTUBE, CENTERED OPPOSITE D3502-1 SUPPORT, PER QSI 035.
13) EXTREME CARE MUST BE TAKEN TO PROTECT THE OUTSIDE SURFACE OF THE TUBE. THE OUTSIDE SURFACE MUST BE SMOOTH AND FREE FROM SURFACE DEFECTS SUCH AS SCRATCHES, NICKS, OR DENTS. DEFECTS UP TO 0.005" MAY BE BLENDED OUT LONGITUDINALLY. CIRCUMFERENTIAL GRIND MARKS ARE UNACCEPTABLE. WHEN DRILLING HOLES EXTREME CARE MUST BE TAKEN AND CAREFUL DEBURRING PERFORMED TO ENSURE A CLEAN HOLE WITH NO CRACKING/CHIPPING/GROOVES.
14) TORQUE CLAMPS 60 TO 80 IN-LB. ENSURE AT LEAST 1.5 THREADS SHOWING IN SAFETY AND THAT NUT HAS NOT BOTTOMED-OUT AFTER TORQUING.
15) MAX TWIST AFTER BENDING: WITH XTUBE LAYED FLAT ON SURFACE, THE DIFFERENCE BETWEEN CUFF HEIGHTS FROM THE SURFACE MAY BE NO LARGER THAN 0.25 (ZN C1-3).

UNDER REVIEW
11.07.12

RELEASED
2011-01-18

REV.	DESCRIPTION	BY	DATE
F	ADD HRC TEST OPTION (B8-1) PER PAR 09-040, ADD TWIST LIMIT (A8-1, C1-3), ADD D6015-125 OPTION (C8-1), STOCK DIM NOW MACHINED (D1-4)	CP	10.11.23
E	REVISE GENERAL NOTES; UPDATE TO CURRENT ADD STANDARDS; RELOCATED FLAG #6 PER PAR 08-046 (ZN A6-3); TOLERANCES (ZN C6-3, D1-3)	RF	09.09.30
D	MAG. PARTICLE AND CAD PLATE AS MFD.	CP	06.10.31
C	ADD CAD PLATING	CP	06.08.14
B	ADD D6017-115 & PRIME AND PAINT	CP	06.06.30
A	NEW ISSUE	CP	06.03.31

DESIGN	
DRAWN	
CHECKED	
MFG. APPR.	
APPROVED	
DE APPR.	
DATE	10.11.23

DART AEROSPACE LTD
HAWKESBURY, ONTARIO, CANADA

DRAWING NO. D350-748-141 — REV. F — SHEET 1 OF 4

TITLE: CROSSTUBE (AS 350/355 HI FWD) — SCALE: NTS

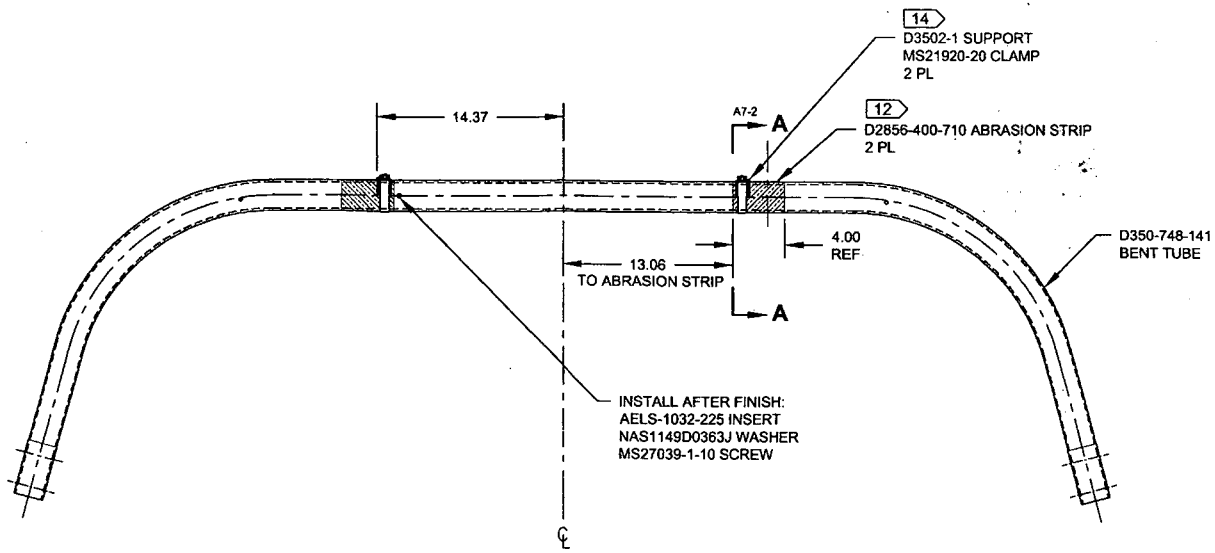

D350-748-141
ASSEMBLY DETAIL

UNDER REVIEW
11.07.11

RELEASED
2011-01-18

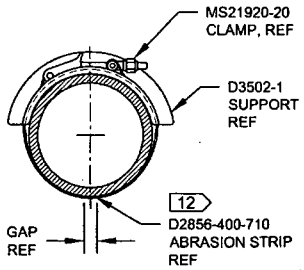

SECTION A-A D4-2
SCALE 4X

DESIGN		**DART AEROSPACE LTD** HAWKESBURY, ONTARIO, CANADA	
DRAWN			
CHECKED		DRAWING NO.	REV. F
MFG. APPR.		D350-748-141	SHEET 2 OF 4
APPROVED		TITLE	SCALE
DE APPR.		CROSSTUBE (AS 350/355 HI FWD)	NTS
DATE	10.11.23		

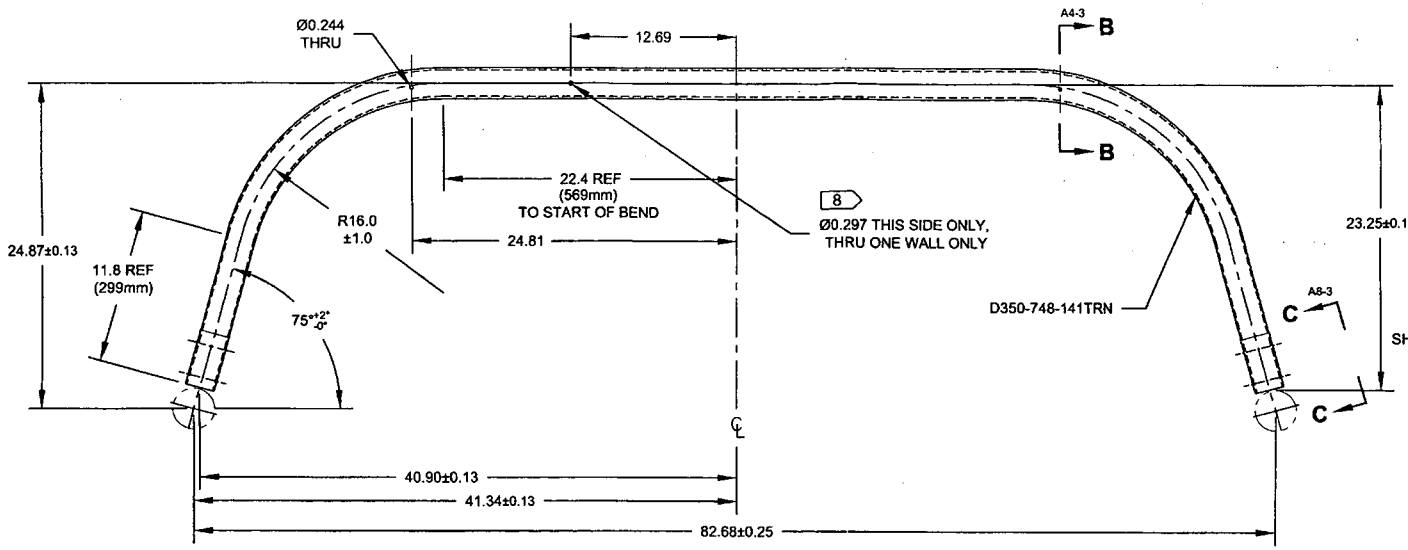

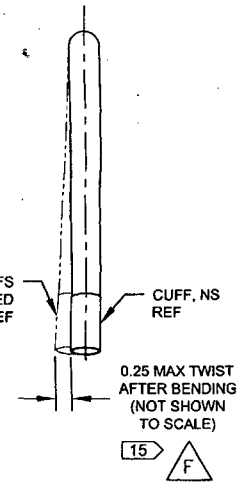

D350-748-141
BENDING AND DRILLING DETAIL 10

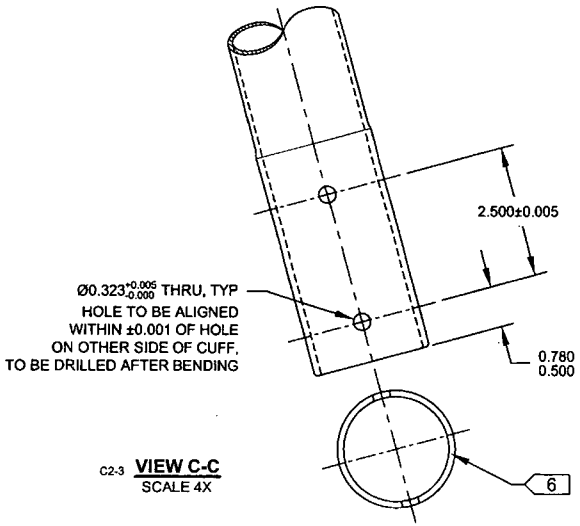

C2-3 **VIEW C-C**
SCALE 4X

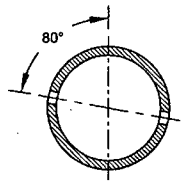

SECTION B-B D3-3
SCALE 4X

UNDER REVIEW
11.27.12

RELEASED
2011 -01- 18

DESIGN		**DART AEROSPACE LTD** HAWKESBURY, ONTARIO, CANADA
DRAWN		
CHECKED		DRAWING NO. REV. F
MFG. APPR.		D350-748-141 SHEET 3 OF 4
APPROVED		TITLE SCALE
DE APPR.		CROSSTUBE (AS 350/355 HI FWD) NTS
DATE	10.11.23	

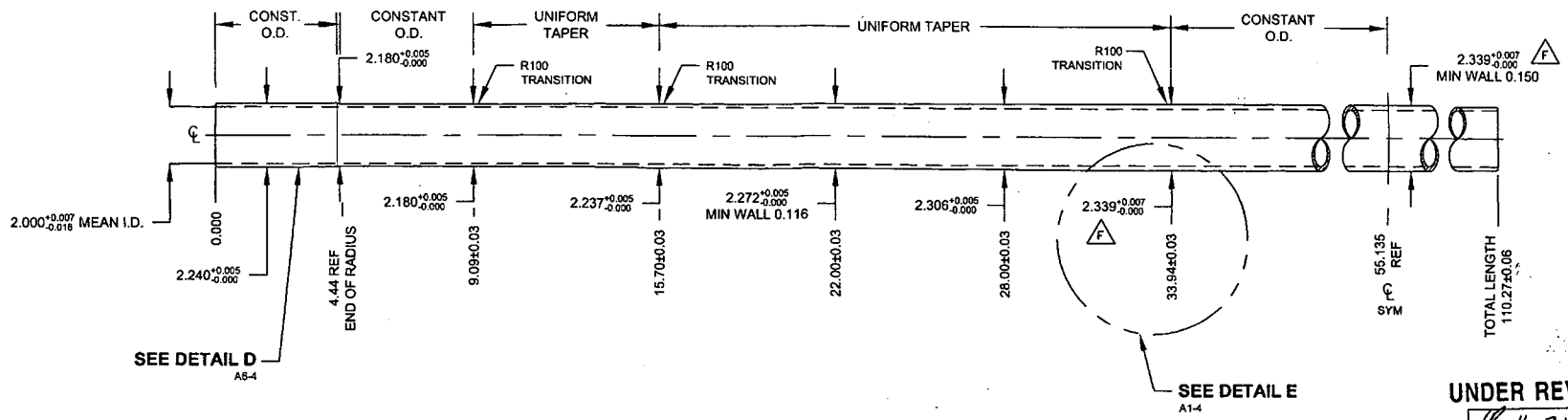

UNDER REVIEW
11.07.12

D350-748-141TRN
TURNING DETAIL

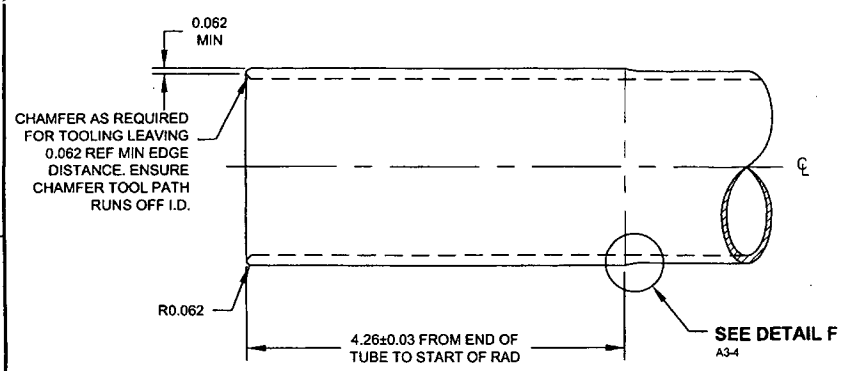

DETAIL D:
CROSSTUBE CUFF C7-4
SCALE 3X

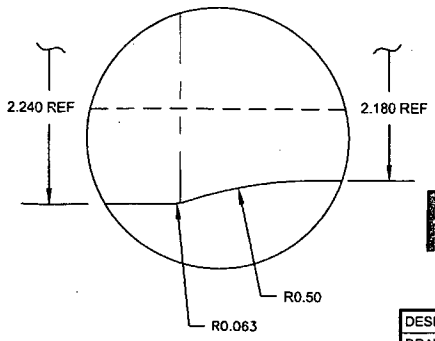

DETAIL F:
CUFF TRANSITION A5-4
NOT TO SCALE

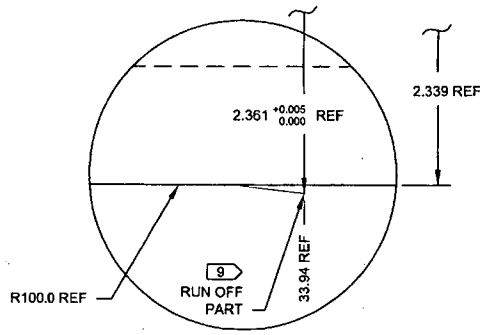

RELEASED
2011-01-18

DETAIL E:
TAPER RUN-OFF C3-4
NOT TO SCALE

DESIGN		**DART AEROSPACE LTD** HAWKESBURY, ONTARIO, CANADA
DRAWN		DRAWING NO. REV. F
CHECKED		D350-748-141 SHEET 4 OF 4
MFG. APPR.		TITLE SCALE
APPROVED		CROSSTUBE (AS 350/355 HI FWD) NTS
DE APPR.		
DATE 10.11.23		

VAC AERO INTERNATIONAL INC.

RELEASE NOTE

GST No.: R105468102

OAK 134819-1

[X] HEAD OFFICE
1371 SPEERS ROAD, OAKVILLE, ONTARIO
CANADA L6I. 2X5
TEL: (905) 827-4171 FAX: (905) 827-7489

[ ] 2009 WYECROFT ROAD, UNIT B
OAKVILLE, ONTARIO
CANADA L6I 6J4
TEL: (905) 827-7377 FAX: (905) 827-1380

[ ] QUEBEC DIVISION
7450 RUE VÉRITÉ STREET, ST. LAURENT, QUÉBEC
CANADA H4S 1C5
TEL: (514) 334-4240 FAX: (514) 334-6269

10/28/2011
MM / DD / YYYY

BILL TO:
1DAR01
DART AEROSPACE LTD.
1270 ABERDEEN ST.
HAWKESBURY, ON

K6A 1K7

SHIP TO:
DART AEROSPACE LTD.
1270 ABERDEEN ST.
HAWKESBURY, ON

K6A 1K7

DATE SHIPPED	SHIP VIA	F.O.B.
10/28/2011		ORIGIN
CUSTOMER P/O No.	JOB No.	TERMS
PO15028		NET 30 DAYS

PART No.	DESCRIPTION	UOM	QTY ORD	QTY SHPD	TEST RESULTS
D350-748	-141 CROSS TUBE	EA	10	10	

Process Specifications: Procedure: 4353
HEAT TREATED TO 180 KSI MIN. PER AMS 2759-1E
100% HARDNESS TESTED AS PER ASTM E-18, 40-45 HRC
MATERIAL: 4130

100% HARDNESS TESTED
10 pcs. 44/45 HRC
AR.
V.A.I.C. TH. 25 Q.C.

LINE#

1	73576	1 PIECE
2	73579	1 PIECE
3	73574	1 PIECE
4	73577	1 PIECE
5	73573	1 PIECE
6	73578	1 PIECE
7	73575	1 PIECE
8	73580	1 PIECE
9		2 PIECES

I hereby certify that the material covered by this release note has been inspected and tested and conforms to all specifications relevant thereto in accordance with the conditions of the contract / or purchase order.

ON BEHALF OF VAC AERO INTERNATIONAL INC.

V.A.I.C. TH. 25 Q.C.

Authorized Q.C. Inspector

INTERTEK AS9100 · ISO 9001

MTI METAL TREATING INSTITUTE

Accredited Nadcap™ Heat Treating • Welding